PRODUCT SPECIFICATION

07-0279-15
EMBANKMENT SLIDE

PRODUCT FEATURES
- Age: 5 to 12 years
- Dimensions: 3.25 x 1.42 x 2.0m
- Obstacle free space: 6.75 x 4.42m
- Fall zone: 5.25 x 4.42m
- Fall height: 1.0m
- Basic material: Robinia, RVS
- Foundation: Loose-poured concrete
- Made from untreated, sapwood-free Robinia wood
- Uprights made from Robinia trunks R14–18
- Platform made from 3cm thick Robinia planks
- Ends of uprights fitted with cross-braces for structural wood protection
- Galvanized screws and bolts
- Stainless steel chute

NOTE FOR INSTALLATION
- Position the play equipment with the slide facing north. This will reduce the heat buildup in the sun. The free space at the slide's outlet should not overlap with the free space of other play equipment.

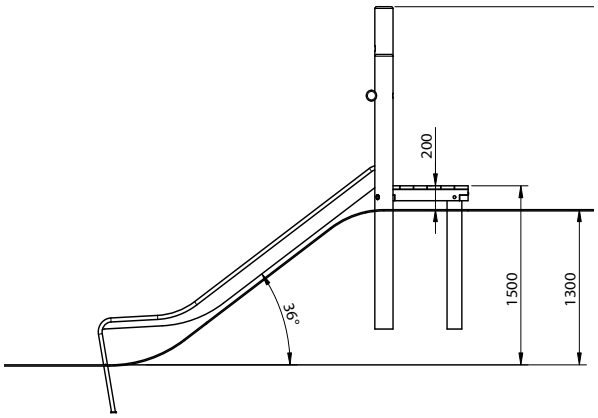

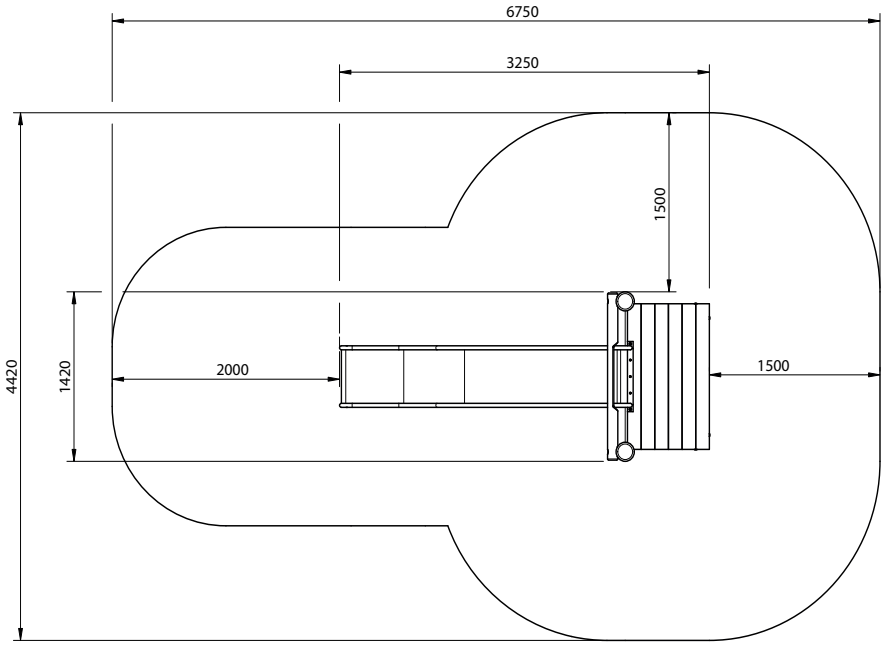

0808 129 3773
enquiries@hornbeckgroup.com
www.hornbeckgroup.com

PRODUCT SPECIFICATION

SUBSURFACE

The fall zone must have sufficient cushioning properties, based on the fall height. The cushioning surface must be at least as large as the fall zone. The cushioning properties depend on the type of surface and the applied layer thickness.

FALL HEIGHT	SUBSURFACE						LAYER THICKNESS
	paving	natural	grass	sand	wood chips	artificial grass	
up to 60cm							Loose material: Synthetic: according to supplier's instructions
up to 100cm							Loose material: Synthetic: according to supplier's instructions
up to 150cm							Loose material: 30cm Synthetic: according to supplier's instructions
up to 200cm							Loose material: 30cm Synthetic: according to supplier's instructions
up to 250cm							Loose material: 40cm Synthetic: according to supplier's instructions

MAINTENANCE

The subsurface is (technically) an integral part of the playground equipment. It must meet the requirements described in the NEN-EN 1177 standard. The playground equipment manager is responsible for periodic inspection and maintenance. The subsurface must be checked monthly for contamination and wear.

Periodic maintenance of the surface depends on the type and intensity of use. A marking is placed on the playground equipment at ground level. Loose material surfaces must be filled up to this marking.

0808 129 3773
enquiries@hornbeckgroup.com
www.hornbeckgroup.com

PRODUCT SPECIFICATION

MAINTENANCE AND INSPECTION

The frequency of maintenance inspections depends on the type of equipment and the materials used, the intensity of use, the degree of vandalism, natural external influences, and the age of the equipment. This should be maintained and carried out accordingly by the manager/owner. (Subject to change and technical innovations.)
Before using any playground equipment, all tools and fasteners used during assembly must be removed, and all nuts and bolts must be checked and tightened to ensure the equipment's safe operation.
It is recommended to check all connections again within 2–4 weeks of first use.

VISUAL INSPECTION

Depending on use, a weekly to monthly inspection is sufficient. Particular attention should be paid to items such as seats, suspensions, excessive wear of chains, ropes, nets, hinges, and other moving parts. Other areas requiring attention include the subsurface, sharp edges of foundations or damage caused by vandalism, and keeping the uprights free of soil, grass, and weeds.

OPERATIONAL INSPECTION

This inspection, performed every 1 to 3 months, serves to check the general condition of the equipment, including its stability. It also includes all points of the visual inspection. Pay particular attention to areas with little or no light or air access, connection points, nuts, and bolts.

ANNUAL MAIN INSPECTION

At least once every 12 months. This inspection is used to determine the condition of the entire play structure. It also includes all points of the visual/operational inspection. The focus is on water ingress, for example, in drying cracks in uprights installed without ground anchors. It is recommended that these uprights be exposed for inspection.

GENERAL

Rotten or broken parts must be professionally repaired/replaced. Splinters, etc., can be sanded away. Check nets and ropes for protruding steel wires. In the case of a single break, it can be repaired with polyurethane adhesive. If multiple breaks occur, the net must be replaced. Bearings and hinges are low-maintenance; greasing them once a year with universal water-repellent grease is sufficient. Horizontal beams or trunks with recessed joints must be fitted with caps to prevent water ingress.
If an inspection reveals any hazards to general safety or serious defects, these must be remedied immediately. If this is not possible, play must be prevented by fencing or disassembly. When disassembling, properly seal and mark the foundation holes.
The aforementioned inspections and maintenance work must be carried out by qualified personnel with the necessary technical knowledge. A logbook must also be kept of what was done, when, and by whom.

NB: Replaced parts must meet the specified specifications. Failure to comply may void the warranty and/or certification! All our equipment may be modified in the event of changes to standards/regulations.

GUARANTEE

Playground equipment comes with the warranty conditions below.

MATERIALS	WARRANTY PERIOD	EXPLANATION
Robinia main construction	10 years	Warranty against breakage and/or rot
Stainless steel parts	15 years	Warranty against (weld) breakage and rusting
Galvanized steel parts	10 years	Warranty against (weld) breakage and rusting
Galvanized steel fasteners	10 years	
Rope materials	5 years	
Bearings of swings and merry-go-rounds	3 years	

The standard warranty period is 10 years, 5 of which are full warranty. After 5 years, the warranty decreases by 20% annually (year 6: 80% / year 7: 60%, etc.). Labor costs for repairs are not included in the warranty.

WARRANTY EXCLUSION

Vandalism, misuse, discoloration, cracks in wooden components due to climatic conditions, incorrect installation, and problems caused by poor or improper maintenance are excluded from the warranty.
All Playground Equipment must be maintained in accordance with our maintenance instructions. In the event of repairs, replacements must be made using original materials and carried out by suitably qualified personnel.
See also NEN-EN-1176, section 7.
Failure to comply with these guidelines will result in the warranty being excluded.

0808 129 3773
enquiries@hornbeckgroup.com
www.hornbeckgroup.com